mm [inch]

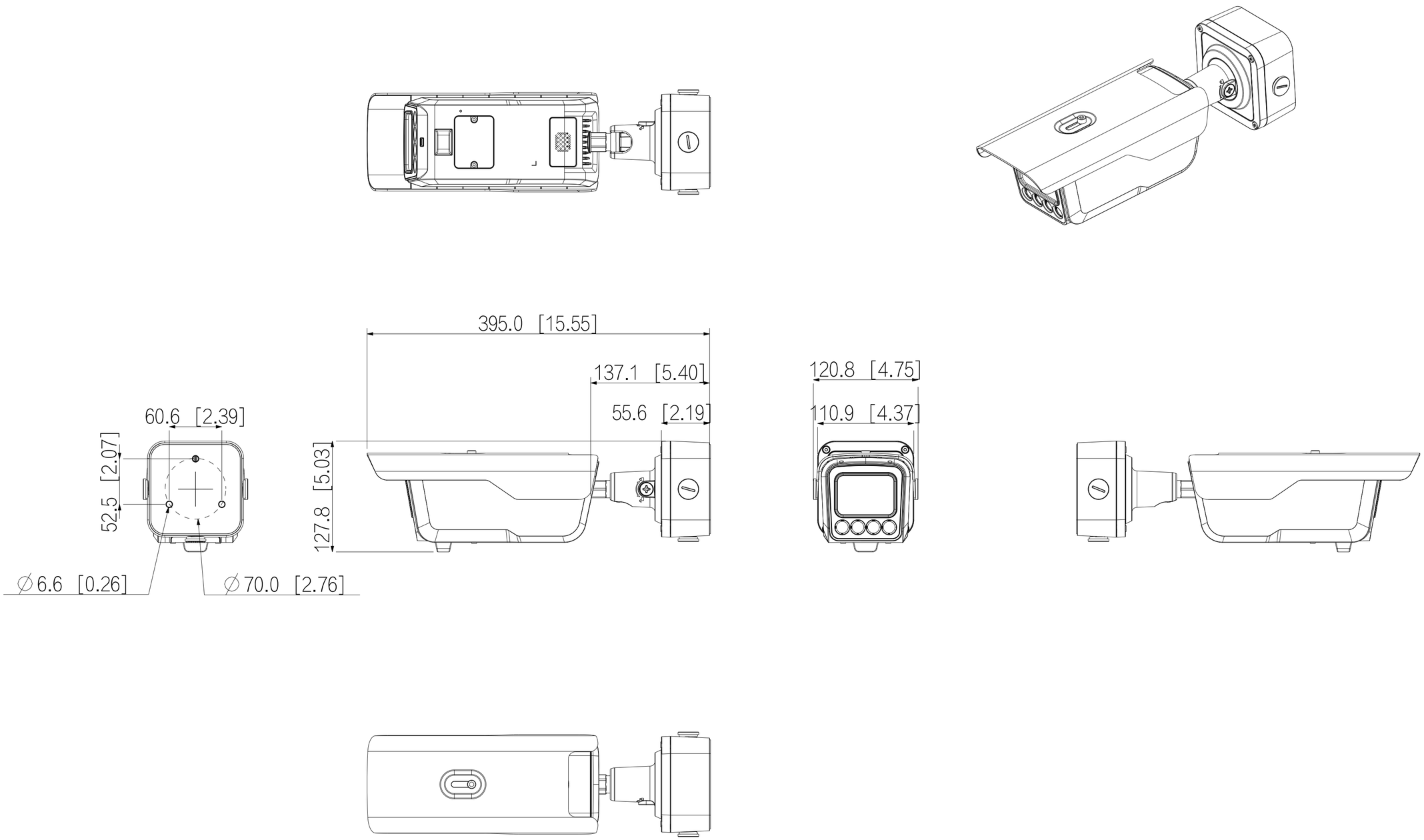
395.0 [15.55]
137.1 [5.40]
55.6 [2.19]
60.6 [2.39]
52.5 [2.07]
127.8 [5.03]
∅6.6 [0.26]
∅70.0 [2.76]
120.8 [4.75]
110.9 [4.37]